## UL/CSA 1691 Compliant

# rhino-hide®

# Single Pole Cam-Type Connectors

For applications up to 400A, 600V AC or DC

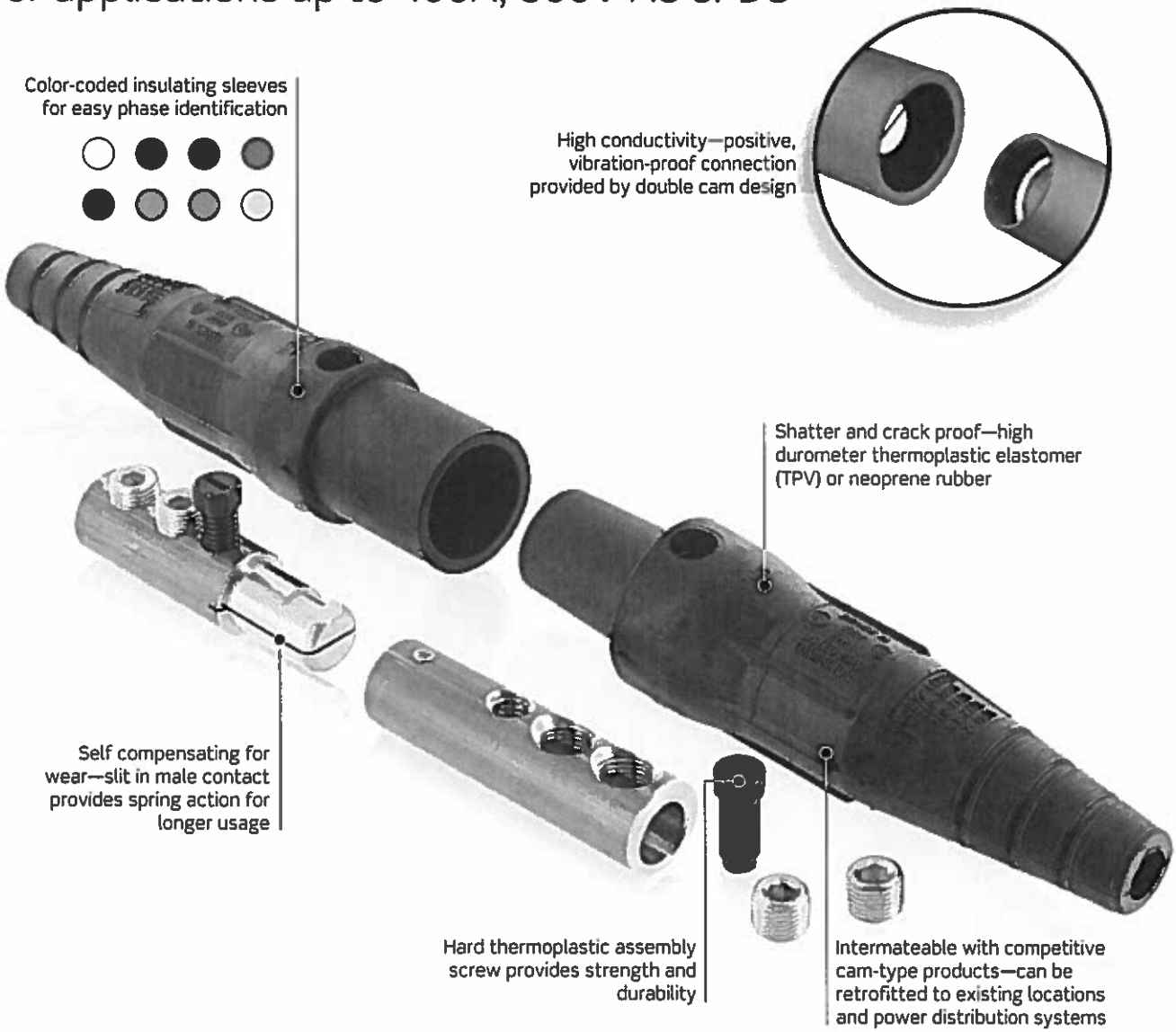


### Common Applications

- Sports, Entertainment and Movie Industry
- Theme Parks and Carnival Equipment
- Concert Venues and Convention Centers
- Motor and Generator Splices
- Mining Operations
- Welding and Construction Sites
- Commercial and Navy Shipbuilding/Repair
- Petrochemical and Manufacturing Plant Turnarounds
- Numerous Other Temporary Power Applications

## 16 Series: Single or Double Set Screw or Crimp Tube Termination — NEMA 3R Rated for Outdoor Use

The 16 Series Taper Nose products are the connectors of choice for power distribution for construction sites, mining operations, concerts, sound stages, movie-making, television production, sporting events and conventions.

16D21-UR

16D29-UG

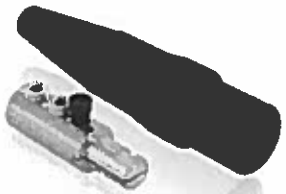
16D24-UE

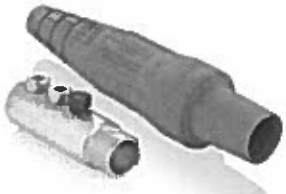
16D33-UO

### CAM-TYPE PLUGS

| | | | | |
|---|---|---|---|---|
| Cable Size: #6 - #2<br>Max Ampacity: 190A | Double Set Screw Termination Ⓛ ⓒ | | | |
| | Male Plug | | Female Plug | |
| | 16D44-U* | | 16D45-U* | |
| Cable Size: #2 - #1<br>Max Ampacity: 220A | Crimp Tube Termination Ⓛ ⓒ | | | |
| | Male Plug | | Female Plug | |
| | 16D25-U* | | 16D34-U* | |
| Cable Size: #2 - 2/0<br>Max Ampacity: 300A | Single Set Screw Termination | | Double Set Screw Termination Ⓛ ⓒ | |
| | Male Plug | Female Plug | Male Plug | Female Plug |
| | 16D21-U* | 16D29-U* | 16D22-U* | 16D31-U* |
| Replacement Contacts | — | — | 16D22-UC | 16D31-UC |
| Cable Size: 1/0 - 2/0<br>Max Ampacity: 300A | Crimp Tube Termination Ⓛ ⓒ | | | |
| | Male Plug | | Female Plug | |
| | 16D26-U* | | 16D35-U* | |
| Cable Size: 2/0 - 4/0<br>Max Ampacity: 400A | Single Set Screw Termination | | Double Set Screw Termination Ⓛ ⓒ | |
| | Male Plug | Female Plug | Male Plug | Female Plug |
| | 16D23-U* | 16D32-U* | 16D24-U* | 16D33-U* |
| Replacement Contacts | — | — | 16D24-UC | 16D33-UC |
| Cable Size: 3/0 - 4/0<br>Max Ampacity: 400A | Crimp Tube Termination Ⓛ ⓒ | | | |
| | Male Plug | | Female Plug | |
| | 16D28-U* | | 16D37-U* | |

Replace * with the following: W (White), E (Black), H (Brown), R (Red), B (Blue), O (Orange), G (Green), Y (Yellow).

### REPLACEMENT SLEEVES (TPV)

| | For Plugs 1/0 to 4/0 | | For Plugs #2 - 2/0 | |
|---|---|---|---|---|
| | Male Plug | Female Plug | Male Plug | Female Plug |
| | 16SDM-1U* | 16SDF-1U* | 16SDM-2U* | 16SDF-2U* |

Replace * with the following: W (White), E (Black), H (Brown), R (Red), B (Blue), O (Orange), G (Green), Y (Yellow).

### CAM-TYPE PLUGS

| | | |
|---|---|---|
| Cable Size: 2/0 - 4/0<br>Max Ampacity: 400A<br>Flame Retardant | Double Set Screw Termination Ⓛ ⓒ | |
| | Male Plug | Female Plug |
| | 16D40-U | 16D41-U |

These devices available in White only.

Note: Some items may require extended lead times; always consult with your local sales representative for current availability.

# Dimensional Diagrams

## 16 Series Devices

Male Detachable Plug

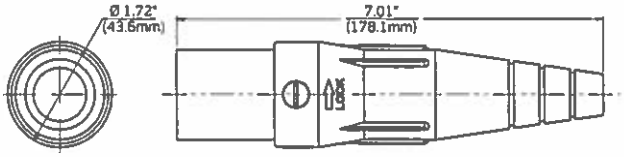


Female Detachable Plug

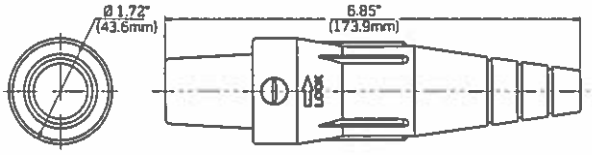


16F21 Female Terminal Connector

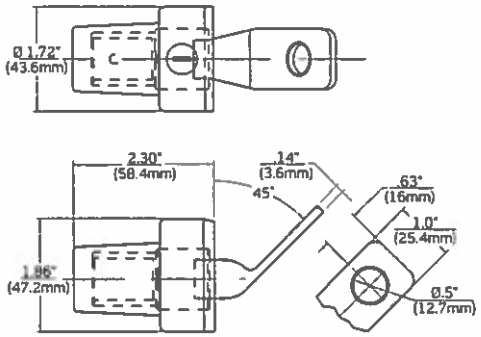


16F22 Female Terminal Connector

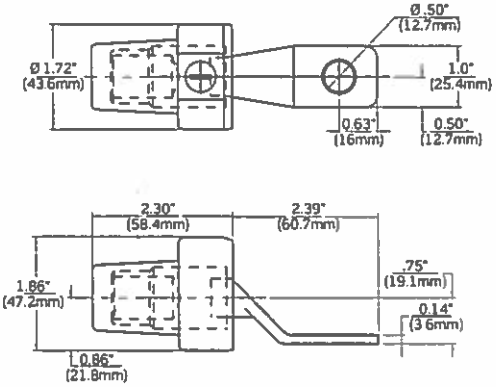


Male Protective Cap

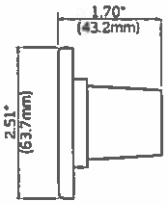


Female Protective Cap

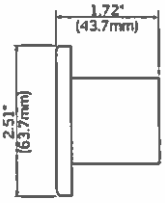

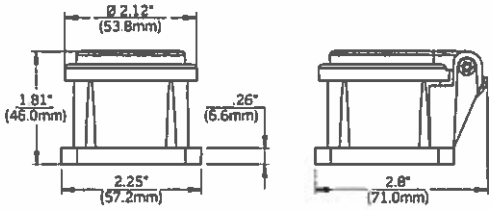
Enclosure for Male and Female Panel Receptacles